WABCO

INSTALLATION OF

PHANKILL UNITS ON STYLES "N" and "N-2" COLOR LIGHT SIGNALS

SERVICE
MANUAL
5430

JUNE, 1970

WESTINGHOUSE AIR BRAKE COMPANY
SIGNAL & COMMUNICATIONS DIVISION
Swissvale Post Office, Pittsburgh, Pa. 15218
An American-Standard Company

INSTRUCTIONS FOR INSTALLATION OF "PHANKILL UNITS" ON STYLES "N" AND "N-2" COLOR LIGHT SIGNALS

****

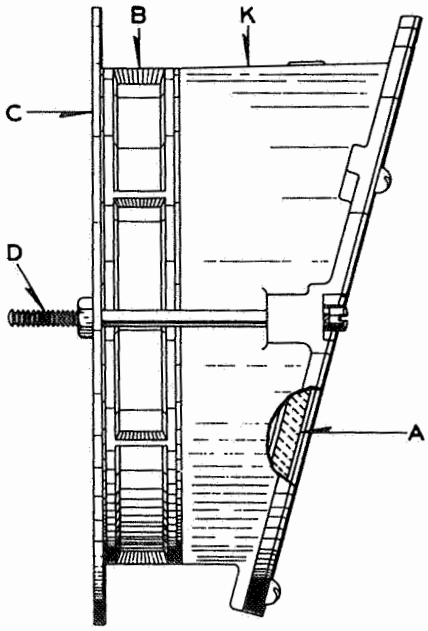

Fig. 1

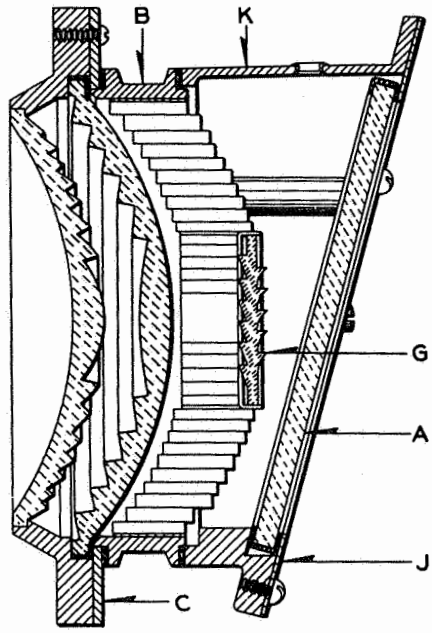

Fig. 2

GENERAL

Phankill units for Styles "N" and "N-2" signals are shipped out as shown in Figure 1, and consist of a flat inclined deflecting or plain cover glass "A" mounted in holder "K", adjustable ring "B", which contains a specially formed screen with close-up deflecting prism "G" and sheet metal ring "C", all clamped together with screws "D". The nuts on screws "D" are for shipping purposes only and are to be discarded when unit is installed.

INSTALLATION

1. Referring to Figure 3, which is a front view of the "N" or "N-2" lens unit, first remove the 1/4 inch-20 hex screws "E" and discard them, as they

have served their purpose.

2. Remove and discard lens ring "F" by removing screws "H".

3. Install in its place ring "C", Figures 1 and 2, which is furnished with the unit, using the same three screws "H" which originally supported ring "F". When doing this, care should be exercised that the front lens of the signal is not disturbed. Additional putty or Vulcatex compound between lens and new ring "C" should be used if found necessary.

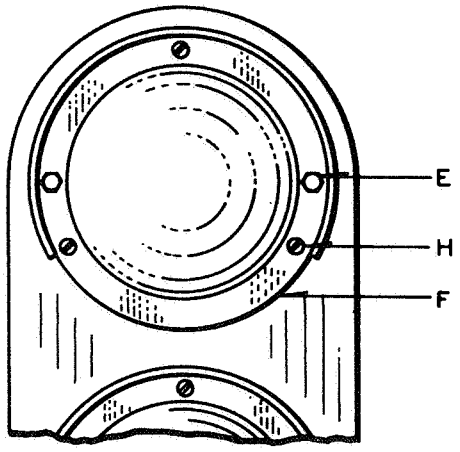

Fig. 3

4. Place the Phankill Unit "B" and cover glass holder "K" in position on the signal and fasten with the two long 1/4 inch-20 hex screws "D" in the tapped holes previously occupied by screws "E". Make sure that the two cork gaskets cemented to the steps on the Phankill unit holder are properly seated against the lens ring "C" in back, and cover glass holder "K" in front.

5. Where signal was previously equipped with a close-up prism, this prism is located between the front and back lenses and held in place by a spring holder. This prism must be removed as only light parallel to the signal axis will pass through the screen. This is accomplished by removing the back lens and detaching the prism and its holder. In replacing the back lens, make sure that the yellow line on the lens coincides with the yellow line on the housing. If these lines have been obliterated, lens and housing should be marked before lens is removed so it can be replaced in original position.

Adjustment of Close-up Prism

Phankill unit assemblies whose installation is described above, have a close-up prism "G" attached to the front of the Phankill screen.

To adjust this prism, loosen, but do not remove, the screws "D" which fasten the complete unit to the signal. Rotate the entire Phankill screen in its cast holder until the close-up indication is observed at the desired point.

After this adjustment is made, tighten the two long screws "D" securely.

Cover Glass

Units which are furnished with a deflecting cover glass at "A" have these glasses assembled to deflect the light as indicated by the position of the arrow moulded in the glass. On dwarf signals a 10° deflecting cover glass with painted risers is used, assembled with prism steps on the outside and mounted to deflect light upward. The cover glass "A" may be rotated in its inclined holder to deflect the light in other directions by loosening ring "J". After the cover glass has been rotated, tighten the screws which secure ring "J". For use on high signals both 10° and 20° flat deflecting cover glasses are available. There is also a clear flat plain cover glass for use on straight track where no deflection is desired. When used on high signals the deflecting cover glasses are provided without the risers on the steps being painted and are assembled in the housing with the steps on the inside.

The alignment of a signal on curves when equipped with this phankill unit is the same as described in Instruction Pamphlet U-5452.

Printed in U.S.A.